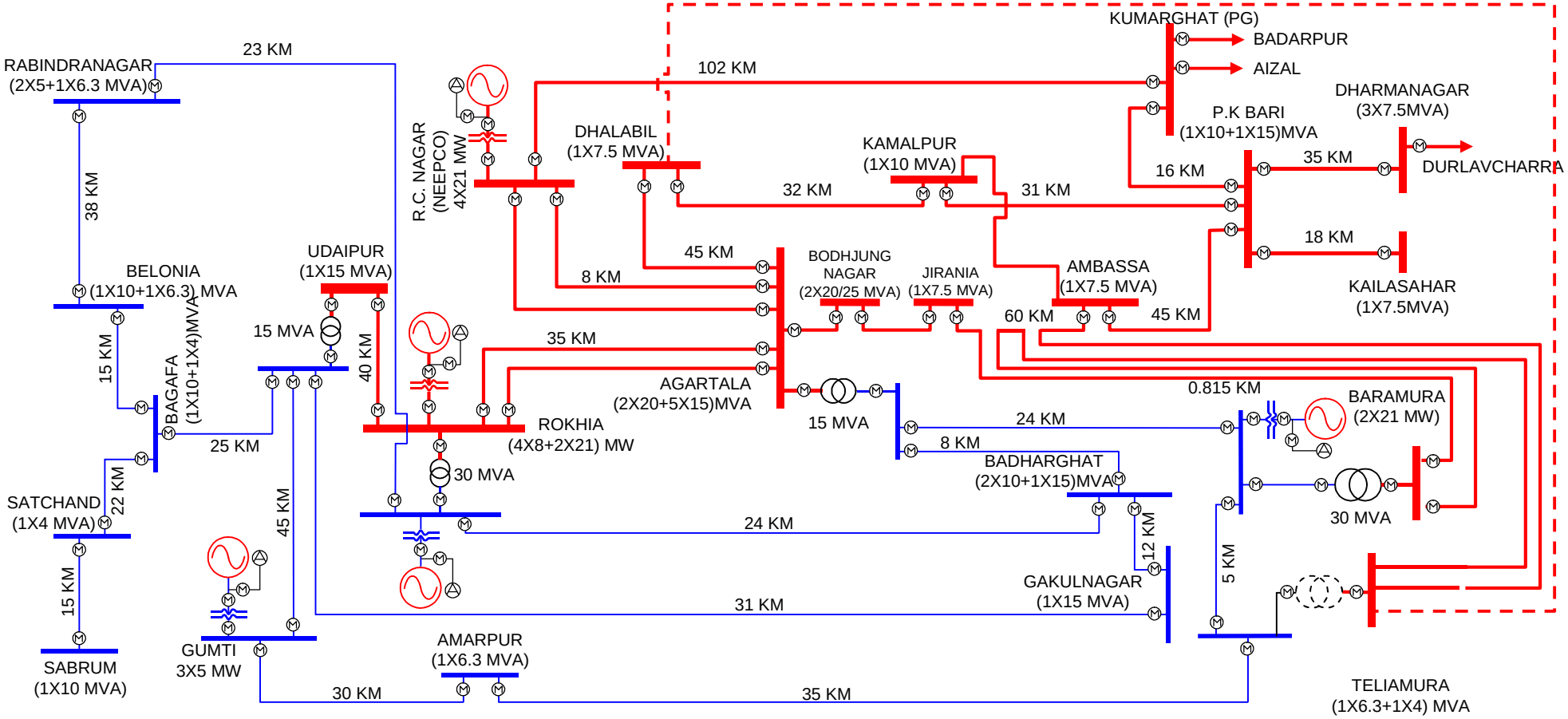

LEGEND

A) 132KV LINE	METER INSTALLED Ⓜ
B) 66KV LINE	METER NOT INSTALLED

C) CONDUCTOR
66KV line ACSR DOG conductor
132KV line ACSR PANTHER conductor except Khowai-Kamalpur (32KM) in 2ND fdr. & Champaknagar-Teliamura (15KM) IN 1ST fdr. – Alloy conductor.

Tripura State Electricity Corporation Limited	SHEET NO		Signature
	1 OF 1	DRAWN	
S.L. DIAGRAM OF TRIPURA POWER NETWORK INDICATING LOCATION OF ENERGY METER		CHECKED	
		APPROVED	